Foot-powered SCROLL SAW

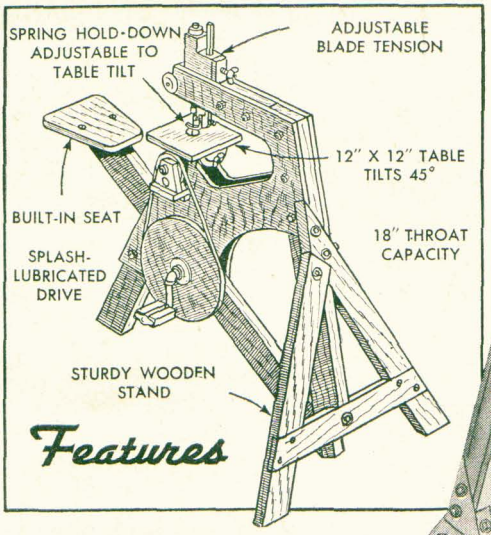

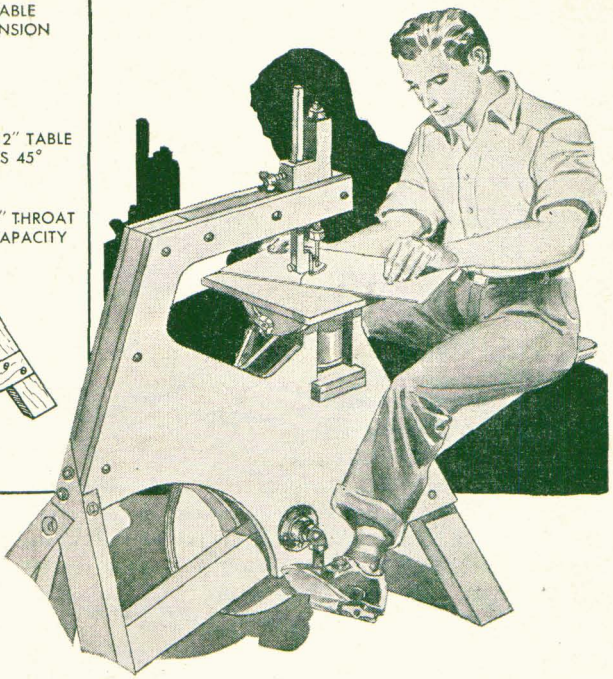

Although designed to be pedaled like a bicycle, you can use a motor to run this sturdy scroll saw. It is built almost entirely of wood, has splash-type lubrication, adjustable blade tension and other features as shown above

By Wayne C. Leckey

PART I

SCARCITY of metal need not keep you from having a scroll saw, as this one is made mostly of wood. Aside from the bolts and bushings required, the few other pieces of metal needed can be salvaged, in most cases, from odds and ends found in the junk box. If plywood is not available in your particular locality, you can resort to solid stock by gluing up panels of sufficient width. The crankshaft mechanism of the drive head operates in a bath of oil and is sealed inside an ordinary 1-qt. paint can of the type having a press-fit lid. Fig. 4 will give you an idea of how it works. A crankshaft, entering the side of the can, engages a bar, which slides back and forth in a channel clamped to a vertical shaft. This produces a smooth reciprocating motion of the shaft, much like a piston, the stroke being 1 in. Oil in the bottom of the can is splashed by the crankshaft to keep the mechanism well lubricated.

The complete drive unit is shown in Fig. 1, partly cutaway so that you can get a better idea of its assembly. Bronze spindle bushings (Ford model-T type) are used as sleeves for the vertical shaft and also as a bearing for the crankshaft. Fig. 3 shows how the channel is clamped to flattened places on the shaft, and how the lower bushing is mounted in a flat-iron bracket. Note from Fig. 4 that the bolts in the latter fasten both it and the can to the wooden base. You can work the channel to shape by hand using a hacksaw, chisel and file, or you can have the channel and crankshaft made. Thick felt washers prevent leakage of oil at points where the two shafts pass through the can. The oil level, of course, should be kept below the hole in the side of the can, as shown in Fig. 4.

It is important that the block holding the crankshaft bearing be rigid. Fig. 2 shows a way of bolting this, which allows it to be retightened easily if it should work loose. When installing the crankshaft there must be no end play, as the face of the disk,

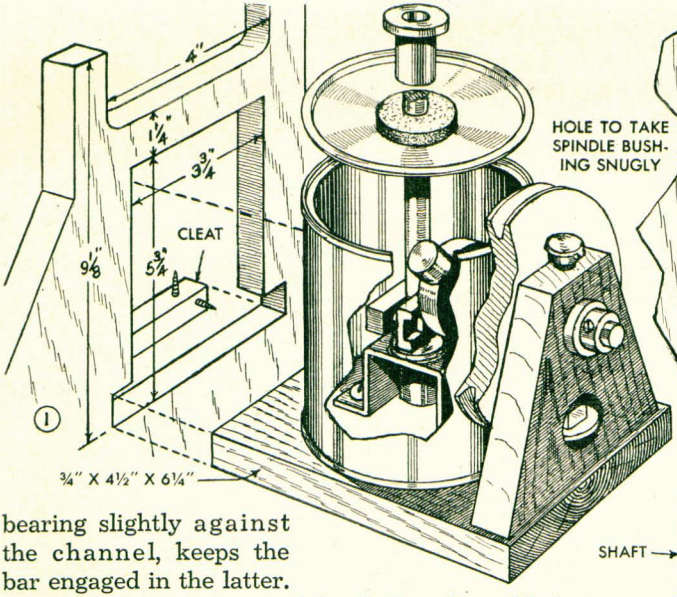

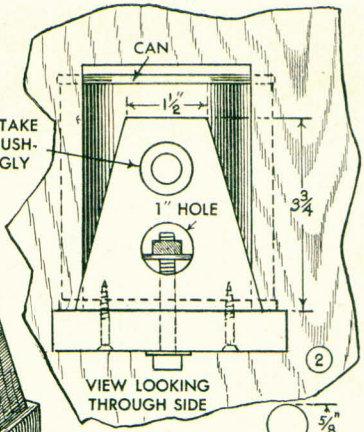

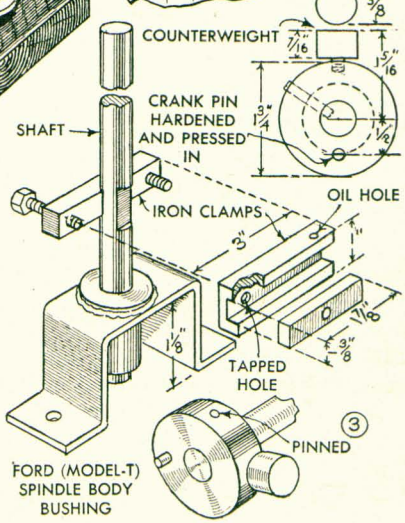

bearing slightly against the channel, keeps the bar engaged in the latter.

It also prevents twisting of the shaft and saw blade, which would cause the latter to break. So, see that the setscrews in the pulley and the collar are tightened securely to the shaft on each side of the bushing, without side play. If desired, you can make the pulley of wood and pin it to the shaft. Before the lid can be pressed on the can, the upper end of the shaft must be threaded and slotted, so that a blade chuck like the one detailed in Fig. 7 can be fitted to it after the upper bushing and the filler block in which it fits, have been slipped over the end.

You can set the drive-head unit aside for the time being, and proceed to make the wood stand.

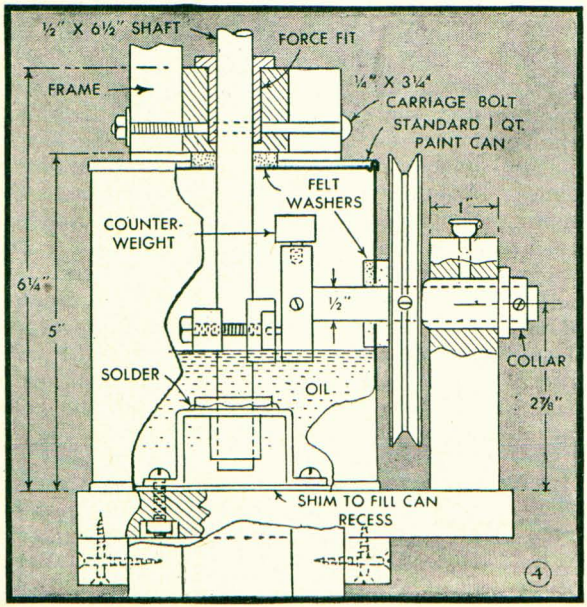

Plywood is preferred but solid stock can be used. Fig. 9 shows how both side pieces can be laid out economically on a 41 by 63½-panel, after which the two can be cut apart roughly with a compass saw and then trimmed to exact size. The size of the opening in which the drive head fits is given in Fig. 1. Note that the left-hand side has projections above the opening, which serve as stops for the tilting table. The frame or core to which the side pieces are glued and bolted is made up of common 2 by 4-in. material. Fig. 6 shows the arrangement of the pieces, while Figs. 5 and 8 detail how the rear legs are fastened rigidly with bolts and screws. The member which extends to form a seat is bolted to the front and rear legs

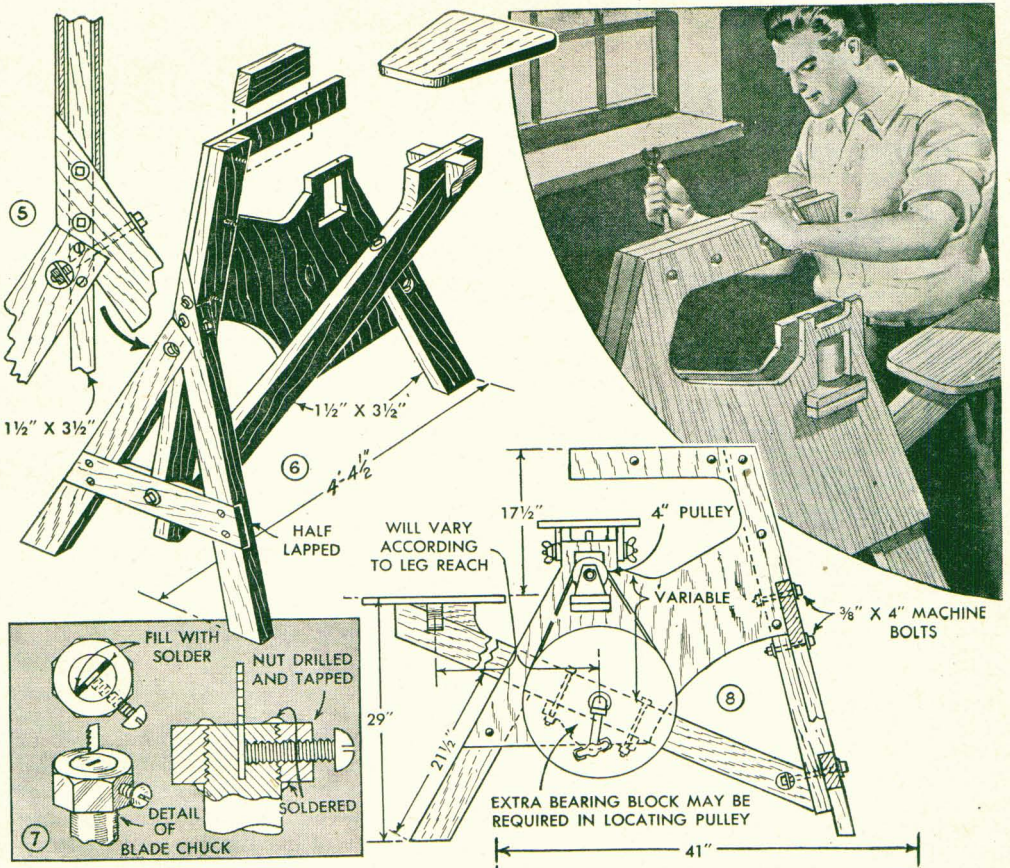

in the same way as used in the drive head. As individual leg reach varies, the length of this piece will have to be determined by trial. This is likewise true in locating the bearing hole for the large drive pulley. For some persons it may be satisfactory if centered in the seat member as in Fig. 8; for others it may be necessary to fit an extra block as indicated to permit lowering the position of the pulley to a point where it is easy to pedal.

Assemble the stand as far as shown in Fig. 6 and then slip the drive unit into the opening provided for it before putting the opposite plywood side on the frame. This of course, will necessitate removing the pulley and the wood bearing block. In doing this, be careful that the pin in the crankshaft does not disengage the bar. Cleats are used in the manner shown in Figs. 1 and 4 to fasten the drive unit in place, after which the filler block containing the upper bushing of the shaft is bolted flush with

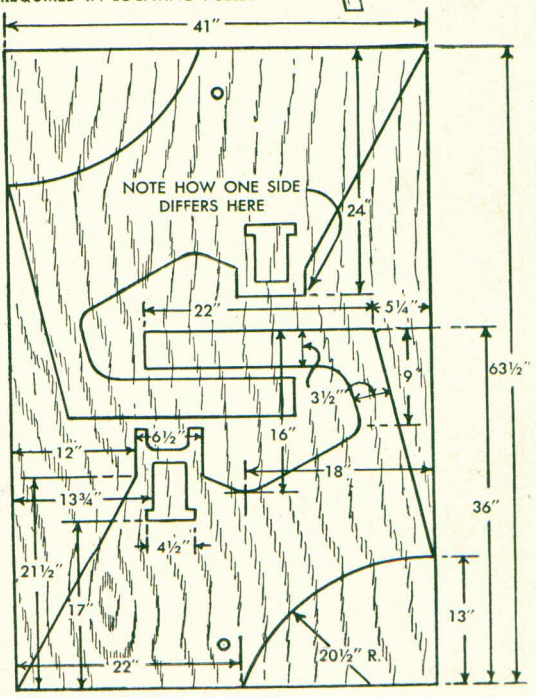

9 HOW SIDES CAN BE LAID OUT ECONOMICALLY

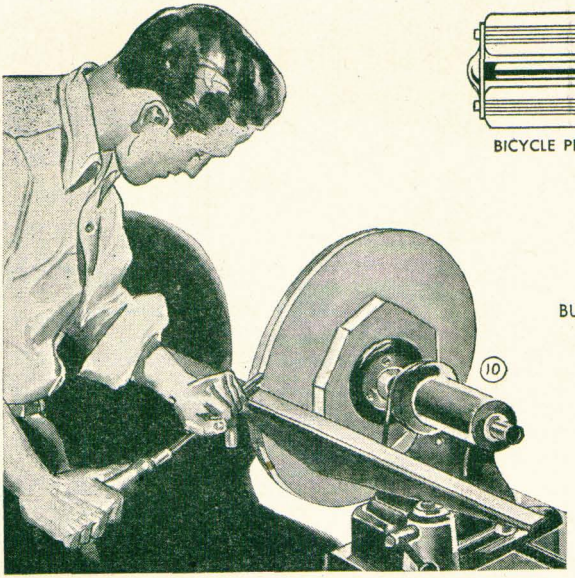

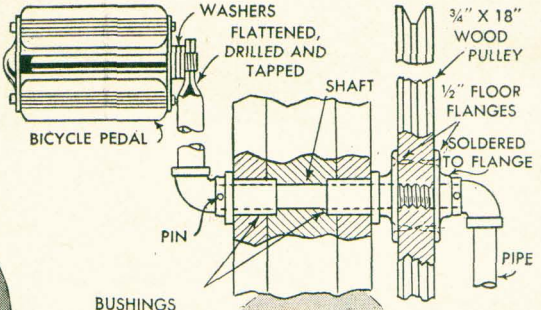

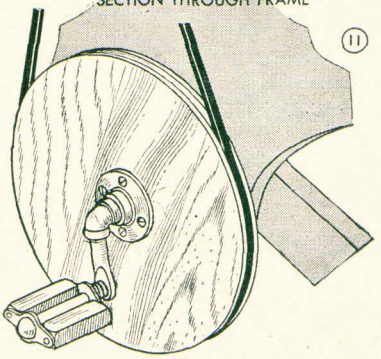

the top of the plywood sides. With this filler block in place, you can go ahead and add the blade chuck to the slotted end of the shaft. This consists of a hexagon nut screwed and soldered to the end and then drilled and tapped crosswise for a setscrew to clamp the blade as shown in Fig. 7. The blade can be made self-centering in the chuck by filling the slot with solder on each side of a piece of wood that is the same width as the blade.

The sectional view in Fig. 11 shows how the large drive pulley is held to a ½-in. pipe shaft by two floor flanges which are centered and screwed opposite each other. One end of the shaft is threaded to pass through the flanges far enough to permit a ½-in. elbow to be pinned to the projecting end and soldered to the flange. If you are unable to have the bushings turned of metal to fit the pipe shaft, satisfactory ones can be turned of hard maple and replaced at signs of wear. If metal bushings are used, they should be a press fit in the stand. Bicycle pedals, which can be picked up at a repair shop, attached to flattened ends of short pipe arms make a neat job. Owing to the size of the plywood drive pulley, you'll have to true it on the outer end of the lathe as shown in Fig. 10.

Cotter Pins Hold Bandsaw Blade in Vise While Brazing

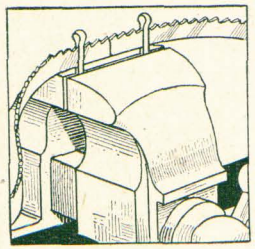

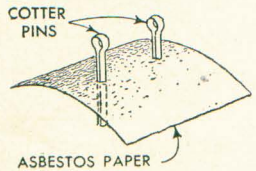

Instead of making up a special jig to hold the ends of broken bandsaw blades in perfect alignment while brazing, just slip a couple of large cotter pins over the blade and clamp them in a vise as shown. To protect vise jaws against excessive heat from the torch, a piece of asbestos paper can be held in place under the blade by forcing both cotter pins through the center of the paper before clamping them in the vise.

Bandsaw Brazing Hint

In brazing bandsaw blades it's best to use silver solder, but in cases where this is not readily available, an inexpensive substitute is the thin brass from an old electric-light bulb. One burned-out bulb will furnish sufficient brass for many brazings and the melting point is about the same as silver solder.